DART *FORD 302* Iron Small Block – *Technical Notes*

Deck Height	**……**	**8.200”**
Bore	**……**	**4.00” or 4.125” unfinished**
Main Bearing Size	**……**	**302 (2.249”)**
Weight	**……**	**8.200” – 160 lb**
Maximum bore	**……**	**4.185”**
Camshaft Journal diameter	**……**	**Standard 302**
Camshaft Position	**……**	**Standard 302**
Cylinder wall thickness, min.	**……**	**.250” @ 4.185” bore**
Deck thickness, min.	**……**	**.675”**

Torque Specs – Main caps **1 – 5 inners ½” bolts - 100 ft lbs w/ CMD #3 high pressure lube**
2-3-4 outers 7/16” bolts - 65 ft lbs w/ CMD #3 high pressure lube

It is good engine building procedure to ALWAYS check the fit of the distributor before any machining or cleaning is done.

SPECIAL NOTE: with a multitude of crankshaft, rod & piston combinations available it is very important to check clearance of all moving parts, especially crankshaft counterweight and connecting rod to block. Because the cylinder barrels have been extended for more piston skirt support with stroker kits you may have to clearance the bottom of the bores for rod clearance. Be careful if you need to add counterweight clearance at the oil pump area. Be sure to leave enough material to seal the oil pump-mounting flange. All parts must be checked before any type of machining or assembly is attempted.

NOTE: If you are using aftermarket cam profiles you must use the correct components for the application.

NOTE: Due to variations in lifter sizes and clearance preference, most of our engine builder customers prefer the lifter bores sized on the small size of the specification. Sometime these bores will need to be lightly honed. The lifter bore spec is .8747”-.8757”. *Most lifter manufacturers recommend .0015”-.002” clearance. ALWAYS CHECK* LIFTER TO BORE CLEARENCE!!

Uses late model H.O 302 timing chain required
Actual deck height will be .001” - .005” taller for additional machining requirements.
When initially removing main caps, the caps and block should be deburred before reinstalling. This will insure that correct main size is maintained.

Use 351W 1/2" head bolt and stud kits
Head stud holes are blind. They do not go into the water jacket.
Locktite #620 is recommended when installing head and main studs into the block.
Studs should *never* be torqued into the block. They should only be lightly snugged.
Note: The tapered portion of the stud body should never contact the deck or bolt hole counter bore. If the stud body does thread to deep and makes contact with the deck surface then you should use a small ball bearing in the bottom of the bolt hole to space up the stud accordingly.

CAM BEARINGS **O.D. should be deburred before installation.**
Camshaft bearing bores are 2.2041”-2.2051” I.D. on all 5 cam bores.
The cam bearings have 5 different I.D.s to fit the stock ford cam journals but common O.D.s.

Position		Brg#	Part#	Cam OD
Front	#1	B384	32210051	2.081”
	#2	B385	32210061	2.066”
	#3	B386	32210071	2.051”
	#4	B387	32210081	2.036”
Rear	#5	B388	32210091	2.021”
Complete Set			32210041	

Cam bearing sets for cams with common 2.081” size on all journals are available from Dart or Durabond # 351RHP.
Cam bearings sets for 2.051” common journals are available from Dart or Ford # M-6261-C351.

When using a front sump oil pan you can use Ford part# M-6059-D351 (STD rotation water pump) or M-8501-B50 (reverse rotation) front cover with provision for a dipstick. The dipstick needs to be in the oil pan with a rear sump. The DART blocks do not have a provision for a dipstick.

HYDRAULIC ROLLER LIFTERS
This block is machined to accept stock Ford hydraulic roller lifters. The holes in the lifter valley for the OEM style sheet metal retainer come with 1/4-20 plugs. These need to be removed to install the retainer bolts. This block has clearance for the stock “dog bone” lifter guides. For standard flat tappet hydraulic, solid and roller lifters these plugs need to be installed.

OIL SYSTEM
The lifter galley is fed from the rear of the block giving it TRUE PRIORITY MAIN OILING.

PIPE PLUGS **All front and rear oil galleys are tapped for ½” AN O-ring fittings. The Dart kit PN# 32000042 includes all necessary pipe plugs needed for assembly.**

Dart SHP Special High Performance Ford 302 Iron Small Block - *Technical notes*

Part#	**31374175 - 31374275**
Material:	**Cast Iron**
Bore:	**4.00” or 4.125” unfinished**
Bore & stroke:	**4.185” x 3.400” max recommended**
Cam bearing bore ID:	**SVO 2.203”- 2.205”**
Cam bearings:	**Special coated, grooved, w/3 oil holes Dart PN# 32210041**
Cam Bearing O.S.	**+ .010”, +.020”, +.030”**
Cam bearing press:	**.002” - .003”**
Cam journal OD:	**Standard Ford SB**
Cam Plug:	**2.375” dia. Cup plug Dart PN# 32510000**
Cylinder Wall Thickness:	**.250” min @ 4.185” bore**
Cubic inch:	**374” max recommended**
Deck Height:	**8.200”**
Deck Thickness:	**.675” min.**
Fuel Pump:	**N/A**
Freeze Plugs:	**STD Ford press in cup plugs 1.500” OD PN# 32820000B**
Head Bolts:	**1/2" Blind holes**
Lifter Bores:	**STD Ford .876” - .8765” Honed to size**
Lifters:	**STD Ford Hydraulic roller compatible**
Main journal size:	**2.249” STD 302**
Main bearing bore:	**2.441” - 2.442” Honed to size**
Main thrust width:	**.926” - .928”**
Main Cap Bolts:	**Inners 1/2-13 x 3.250” Qty 10** **Outers 7/16-14 x 2.750” Qty 6** **10- ½” washers, 6- 7/16” washers**

Main cap press:	**.003” - .004”**
Main caps:	**Steel - 4 bolt, center 3**
Main cap register:	**Deep stepped register on each side (no need for dowels)**
Oil system:	**Priority Main oiling**
Oil Filter:	**Standard SBF filter w/ thread adapter Dart PN# 32940000**
Oil Pan:	**Aftermarket 302 with dip stick in pan**
Rear Main Seal	**Std 1 piece seal - FelPro# 2922 or 2941 4.250”x3.625”**
Serial No.	**Right front & main caps**
Starter:	**Standard SBF**
Stud & bolt holes, Head:	**1/2” STD SVO with Blind holes**
Timing chain/gears	**Late model 302 timing set 1985 – up.**
Timing Cover:	**Uses stock 302 cover**
Torque Specs:	**1-5 inners ½” bolts - 100 ft lbs w/CMD #3** **2-3-4 outers 7/16” bolts – 65 ft lbs w/CMD #3**
Weight, approx.:	**175 lbs - 8.200”**

SBF SHP Oiling Diagram

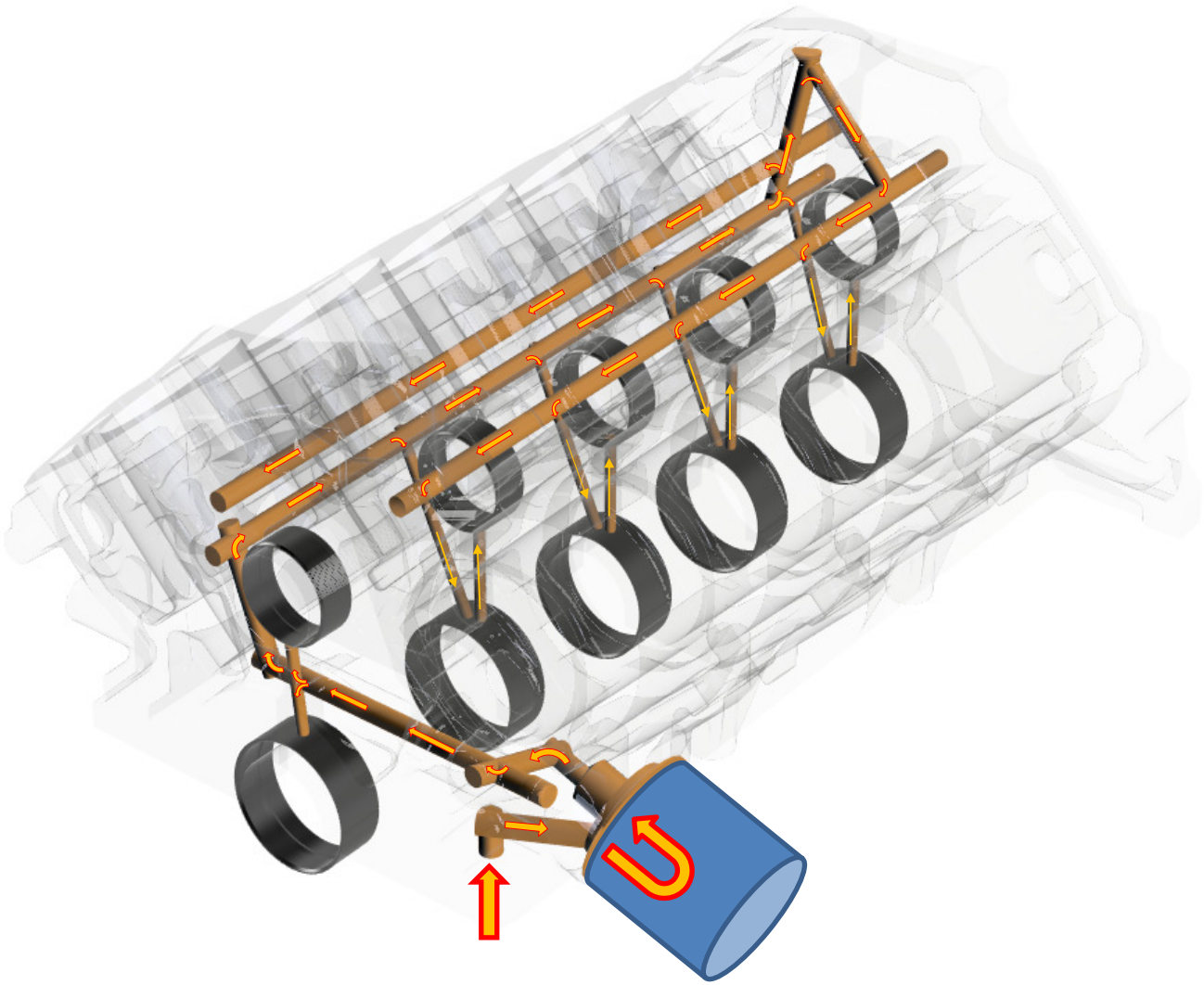

Oil flow comes in from the oil pump pickup, passes through the oil filter, up to the main oil galley feeding the #1 main and cam bearing on the way, it is then diverted to the Main line (Crankshaft) bearings first (Priority main oiling) flows to the Cam bearings and then to the Lifter galleys secondary.

IMPORTANT

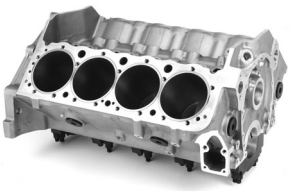

This Block should be assembled only by experienced, professional engine builders.

INSPECTION

Upon receiving this block it should be thoroughly inspected for shipping damage.

Prior to machining and assembly please inspect the following items:
Cylinder bores - Oil passages - Deck surfaces - All threads

MEASURING & MACHINING

- All initial measuring should be done before any machining has begun.
- Decks are CNC machined to standard deck heights. If you need a particular deck height always measure before machining.
- Main journals are finish line honed to the low to middle of the specification. They should be measured for your preference. If you have need for a different diameter you must realign hone this yourself.
- Crankshaft & rod clearance should always be checked before any machining is started. You need .060” clearance for rotating counterweights and rods.
- Due to variations in OD dimensions of the numerous lifter manufacturers, lifter bores are finish honed on the tight side of the tolerance to leave room for lifters that are larger than the standard.

WASHING

- Final washing should be very thorough, paying particular attention to all oil galleys. Use hot soapy water and rinse with hot water first, followed by cold water which helps reduces rust.

DART SHP FORD BLOCK